Introduction to Electronics

Lecture 2 (ELECTRICAL CIRCUITS)

Electric Circuits

- An electric circuit is any arrangement of resistors, wires, or other electrical components (capacitors, inductors, transistors, lamps, motors, etc.) connected together that has some level of current flowing through it.

- Typically, a circuit consists of a voltage source and a number of components connected together by means of wires or other conductive means

- Electric circuits can be categorized as series circuits, parallel circuits, or a combination of series and parallel parts

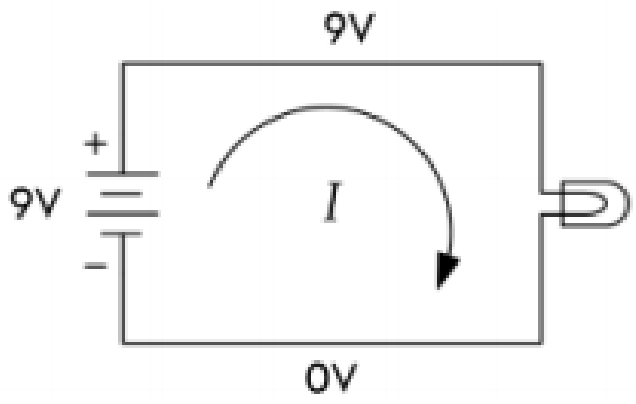

Basic Circuit

A simple lightbulb acts as a load (the part of the circuit on which work must be done to move current through it). Attaching the bulb to the battery's terminals, as shown, will initiate current flow from the positive terminal to the negative terminal. In the process, the current will power the filament of the bulb, and light will be emitted. (Remember that the term *current* here refers to conventional current—electrons are actually flowing in the opposite direction.)

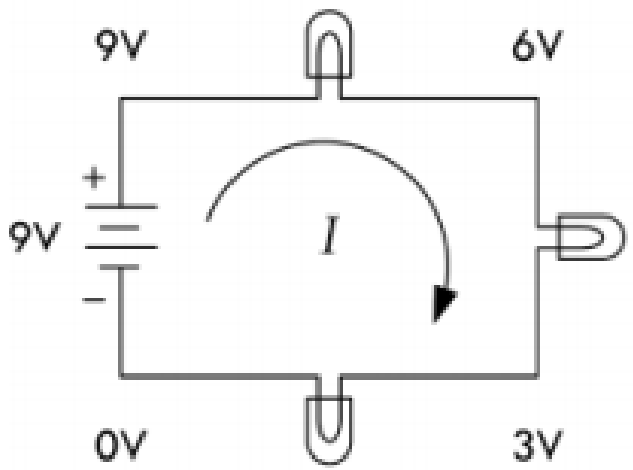

Series Circuit

Connecting load elements (lightbulbs) one after the other forms a series circuit. The current through all loads in series will be the same. In this series circuit, the voltage drops by a third each time current passes through one of the bulbs (all bulbs are exactly the same). With the same battery used in the basic circuit, each light will be one-third as bright as the bulb in the basic circuit. The effective resistance of this combination will be three times that of a single resistive element (one bulb).

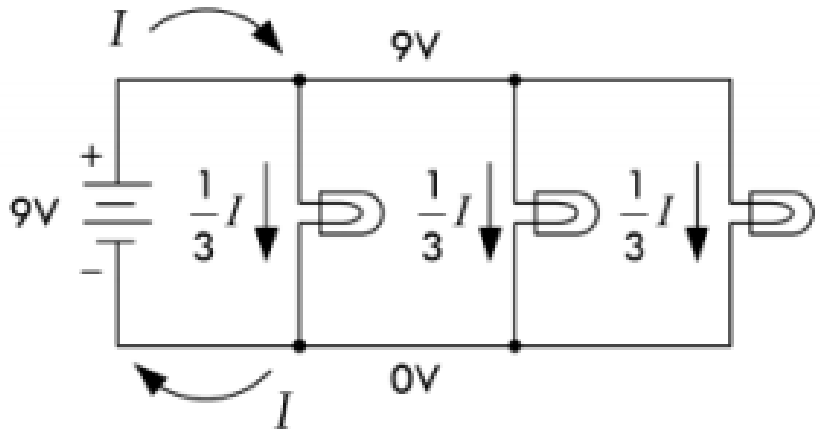

FIGURE 2.37

Parallel Circuit

A parallel circuit contains load elements that have their leads attached in such a way that the voltage across each element is the same. If all three bulbs have the same resistance values, current from the battery will be divided equally into each of the three branches. In this arrangement, light-bulbs will not have the dimming effect, as was seen in the series circuit, but three times the amount of current will flow from the battery, hence draining it three times as fast. The effective resistance of this combination will be one-third that of a single resistive element (one bulb).

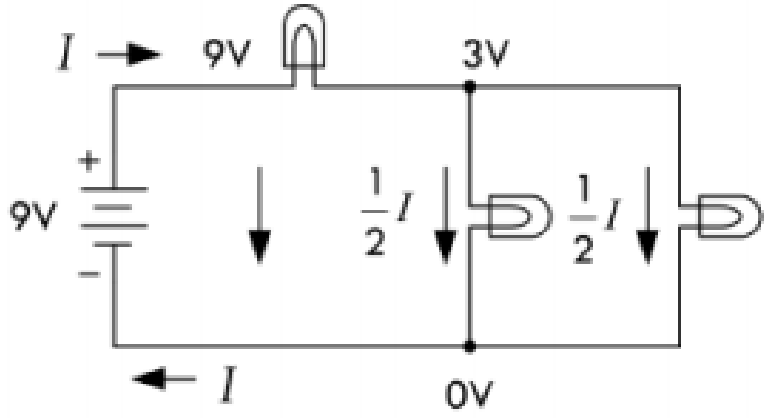

FIGURE 2.37 (*Continued*)

Combination of Series and Parallel

A circuit with load elements placed both in series and in parallel will have the effects of both lowering the voltage and dividing the current. The effective resistance of this combination will be three-halves that of a single resistive element (one bulb).

Circuit Analysis

- Following are some important laws, theorems, and techniques used to help predict what the voltage and currents will be within a purely resistive circuit powered by a direct current (dc) source, such as a battery

Ohm’s Law and Resistors

- Resistors are devices used in circuits to limit current flow or to set voltage levels within circuits

- Figure 2.38 shows the schematic symbol for a resistor; two different forms are commonly used

- Schematic symbols for variable resistors—resistors that have a manually adjustable resistance, as well as a model of a real-life resistor, are also shown. (The real- life model becomes important later on when we deal with high-frequency ac applications. For now, ignore the model.)

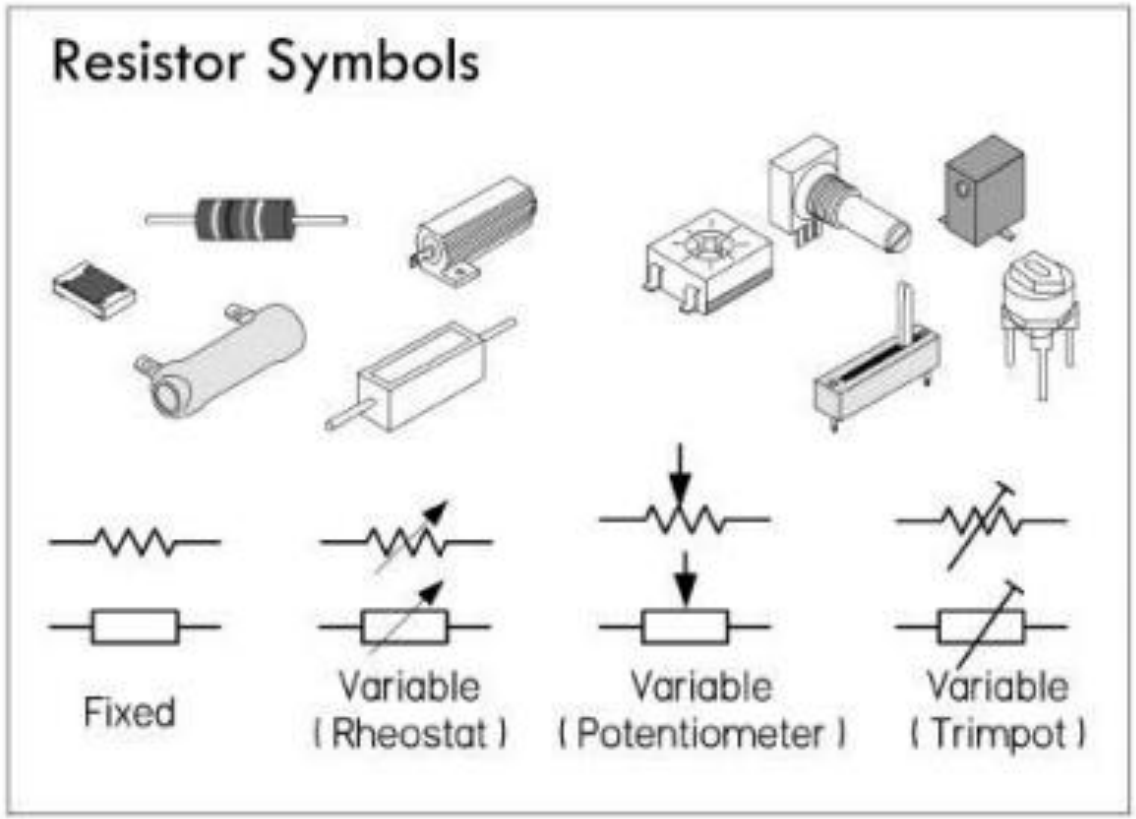
Resistor Symbols
Fixed
Variable
(Rheostat)
Variable
(Potentiometer)
Variable
(Trimpot)

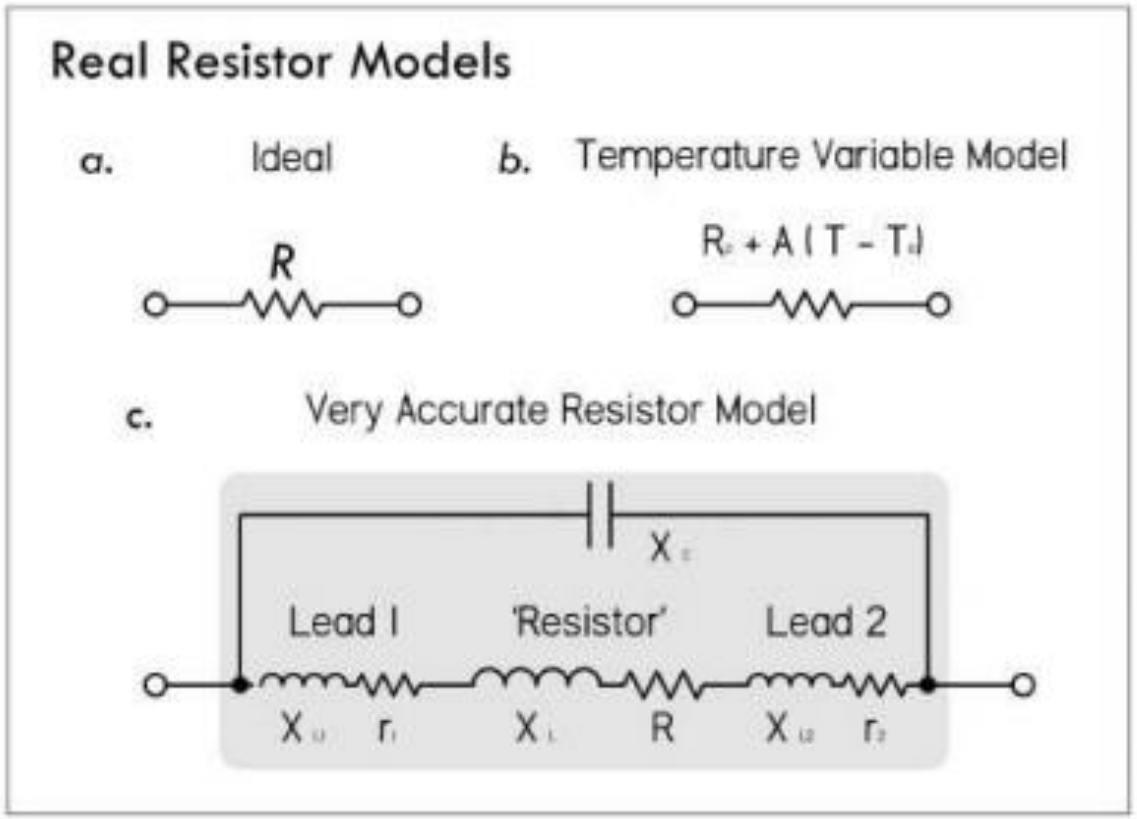
Real Resistor Models
a.
Ideal
R
b.
Temperature Variable Model
c.
Very Accurate Resistor Model
Lead 1
'Resistor'
Lead 2
R

FIGURE 2.38

- If a dc voltage is applied across a resistor, the amount of current that will flow through the resistor can be found using Ohm's law

- To find the power dissipated as heat by the resistor, the generalized power (with Ohm's law substitution) can be used

$$V = I \times R \qquad \text{(2.15) Ohm's law}$$

$$P = IV = V^2/R = I^2R \qquad \text{(2.16) Ohm's power law}$$

- *R* is the resistance or the resistor expressed in ohms (Ω), *P* is the power loss in watts (W), *V* is the voltage in volts (V), and *I* is the current in amperes (A).

UNIT PREFIXES

Resistors typically come with resistance values from 1 Ω to 10,000,000 Ω. Most of the time, the resistance is large enough to adopt a unit prefix convention to simplify the bookkeeping. For example, a 100,000-Ω resistance can be simplified by writing 100 kΩ (or simply 100k, for short). Here k = ×1000. A 2,000,000-Ω resistance can be shortened to 2 MΩ (or 2M, for short). Here M = ×1,000,000.

Conversely, voltages, currents, and power levels are usually small fractions of a unit, in which case it is often easier to use unit prefixes such as m (milli or $\times 10^{-3}$), μ (micro or $\times 10^{-6}$), n (nano or $\times 10^{-9}$), or even p (pico or $\times 10^{-12}$). For example, a current of 0.0000594 A (5.94×10^{-5} A) can be written in unit prefix form as 59.4 μA. A voltage of 0.0035 (3.5×10^{-3} V) can be written in unit prefix form as 3.5 mV. A power of 0.166 W can be written in unit prefix form as 166 mW.

Example: In Fig. 2.39, a 100-Ω resistor is placed across a 12-V battery. How much current flows through the resistor? How much power does the resistor dissipate?

Answer: See Fig. 2.39.

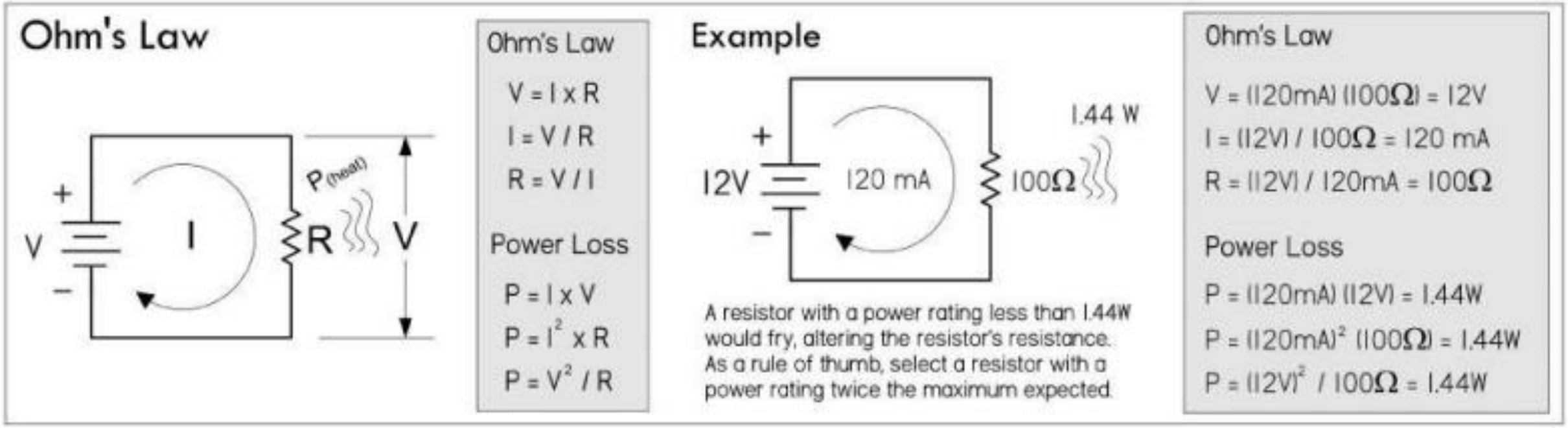

FIGURE 2.39

- Determining how much power a resistor dissipates is very important when designing circuits

- All real resistors have maximum allowable *power ratings* that must not be exceeded

- If you exceed the power rating, you'll probably end up frying your resistor, destroying the internal structure, and thus altering the resistance

- Typical general- purpose resistors come in 1⁄8- , 1⁄4- , 1⁄2- , and 1- W power ratings, while high- power resistors can range from 2 to several hundred watts

- So, in the preceding example, where our resistor was dissipating 1.44 W, we should have made sure that our resistor's power rating exceeded 1.44 W; otherwise, there could be smoke

- As a *rule of thumb,* always select a resistor that has a power rating at least twice the maximum value anticipated

- Though a 2-W resistor would work in our example, a 3-W resistor would be safer

- To illustrate how important power ratings are, we examine the circuit shown in Fig. 2.40

- The resistance is variable, while the supply voltage is fixed at 5 V
- As the resistance increases, the current decreases, and according to the power law, the power decreases, as shown in the graphs
- As the resistance decreases, the current and power increase
- The far right graph shows that as you decrease the resistance, the power rating of the resistor must increase; otherwise, you'll burn up the resistor

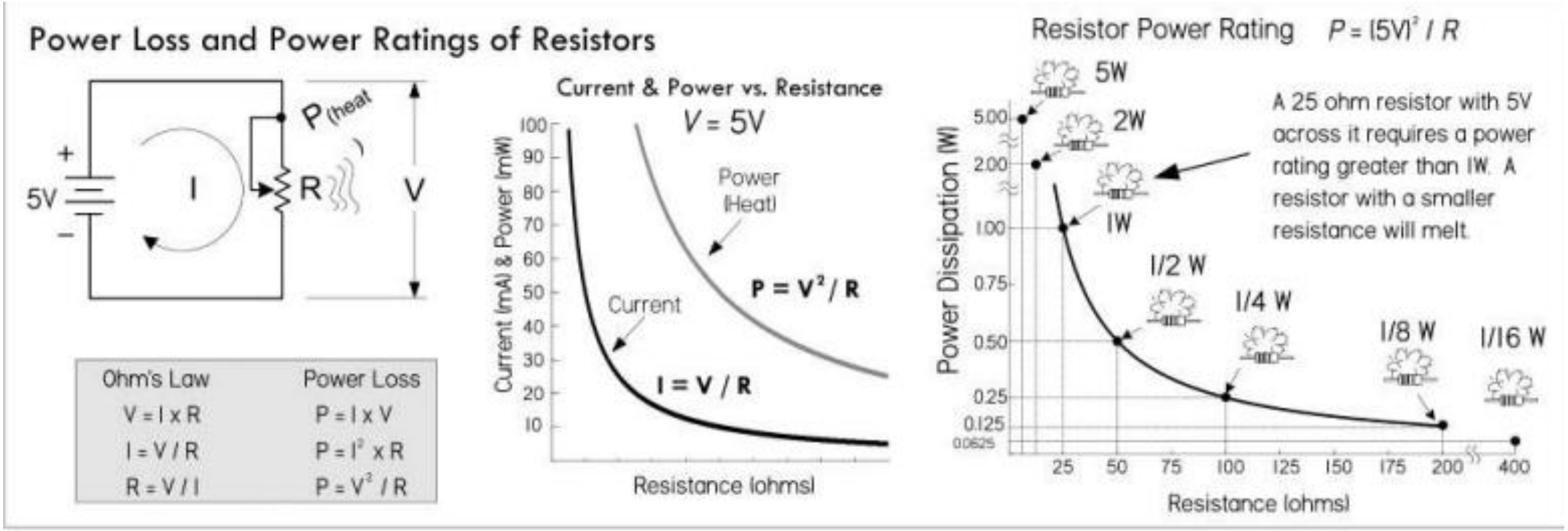
Power Loss and Power Ratings of Resistors
5V
+
−
I
R
P (heat)
V
Ohm's Law
V = I x R
I = V / R
R = V / I
Power Loss
P = I x V
P = I² x R
P = V² / R
Current & Power vs. Resistance
V = 5V
Power (Heat)
P = V² / R
Current
I = V / R
Current (mA) & Power (mW)
100
90
80
70
60
50
40
30
20
10
Resistance (ohms)
Resistor Power Rating P = (5V)² / R
5W
2W
1W
1/2 W
1/4 W
1/8 W
1/16 W
A 25 ohm resistor with 5V across it requires a power rating greater than 1W. A resistor with a smaller resistance will melt.
Power Dissipation (W)
5.00
2.00
1.00
0.75
0.50
0.25
0.125
0.0625
25
50
75
100
125
150
175
200
400
Resistance (ohms)

FIGURE 2.40

Example 1: Using an ammeter, you measure a current of 1.0 mA through a 4.7-kΩ resistor. What voltage must exist across the resistor? How much power does the resistor dissipate?

Answer: $V = IR = (0.001\ \text{A})(4700\ \Omega) = 4.7\ \text{V}$; $P = I^2 \times R = (0.001\ \text{A})^2 \times (4700\ \Omega) = 0.0047\ \text{W} = 4.7\ \text{mW}$

Example 2: Using a voltmeter, you measure 24 V across an unmarked resistor. With an ammeter, you measure a current of 50 mA. Determine the resistance and power dissipated in the resistor.

Answer: $R = V/I = (24\ \text{V})/(0.05\ \text{A}) = 480\ \Omega$; $P = I \times V = (0.05\ \text{A}) \times (24\ \text{V}) = 1.2\ \text{W}$

Example 3: You apply 3 V to a 1-MΩ resistor. Find the current through the resistor and the power dissipated in the process.

Answer: $I = V/R = (3\ \text{V})/(1{,}000{,}000\ \Omega) = 0.000003\ \text{A} = 3\ \mu\text{A}$; $P = V^2/R = (3\ \text{V})^2/(1{,}000{,}000\ \Omega) = 0.000009\ \text{W} = 9\ \mu\text{W}$

Example 4: You are given 2-Ω, 100-Ω, 3-kΩ, 68-kΩ, and 1-MΩ resistors, all with 1-W power ratings. What's the maximum voltage that can be applied across each of them without exceeding their power ratings?

Answer: $P = V^2/R \Rightarrow V = \sqrt{PR}$; voltages must not exceed 1.4 V (2 Ω), 10.0 V (100 Ω), 54.7 V (3 kΩ), 260.7 V (68 kΩ), 1000 V (1 MΩ)

Resistors in Parallel

- Rarely do you see circuits that use a single resistor alone
- Usually, resistors are found connected in a variety of ways
- The two fundamental ways of connecting resistors are in series and in parallel
- When two or more resistors are placed in parallel, the voltage across each resistor is the same, but the current through each resistor will vary with resistance

- Also, the total resistance of the combination will be lower than that of the lowest resistance value present.

- The formula for finding the total resistance of resistors in parallel is:

$$R_{\text{total}} = \frac{1}{\frac{1}{R1} + \frac{1}{R2} + \frac{1}{R3} + \frac{1}{R4} + \cdots} \qquad (2.17)$$

$$R_{\text{total}} = \frac{R1 \times R2}{R1 + R2} \qquad \text{(2.18) Two resistors in parallel}$$

- The dots in the equation indicate that any number of resistors can be combined

- For only two resistances in parallel (a very common case), the formula reduces to Eq. 2.18

- (You can derive the resistor- in- parallel formula by noting that the sum of the individual branch currents is equal to the total current: $I_{\text{total}} = I_1 + I_2 + I_3 + \ldots I_N$

- This is referred to as Kirchhoff's current law

- Then, applying Ohm's law, we get: $I_{\text{total}} = V_1/R_1 + V_2/R_2 + V_3/R_3 + \ldots V_N/R_N$.

- Because all resistor voltages are equal to V_{total} since they share the same voltage across them, we get: $I_{total} = V_{total}/R_1 + V_{total}/R_2 + V_{total}/R_3 + \ldots V_{total}/R_N$

- Factoring out V_{total}, we get: $I_{total} = V_{total}\,(1/R_1 + 1/R_2 + 1/R_3 \ldots 1/R_4)$

- We call the term in brackets R_{total}

- Note that there is a shorthand for saying that two resistors are in parallel

- The shorthand is to use double bars | | to indicate resistors in parallel. So to say R_1 is in parallel with R_2, you would write $R_1 \mid\mid R_2$

- Thus, you can express two resistors in parallel in the following ways:

$$R_1 \parallel R_2 = \frac{1}{1/R_1 + 1/R_2} = \frac{R_1 \times R_2}{R_1 + R_2}.$$

- In terms of arithmetic order of operation, the | | can be treated similar to multiplication or division

- For example, in the equation $Z_{in} = R_1 + R_2 \mid\mid R_{load}$, you calculate R_2 and R_{load} in parallel first, and then you add R_1

Example 1: If a 1000-Ω resistor is connected in parallel with a 3000-Ω resistor, what is the total or equivalent resistance? Also calculate total current and individual currents, as well as the total and individual dissipated powers.

$$R_{\text{total}} = \frac{R_1 \times R_2}{R_1 + R_2} = \frac{1000\ \Omega \times 3000\ \Omega}{1000\ \Omega + 3000\ \Omega} = \frac{3{,}000{,}000\ \Omega}{4000\ \Omega} = 750\ \Omega$$

To find how much current flows through each resistor, apply Ohm's law:

$$I_1 = \frac{V_1}{R_1} = \frac{12\ \text{V}}{1000\ \Omega} = 0.012\ \text{A} = 12\ \text{mA}$$

$$I_2 = \frac{V_2}{R_2} = \frac{12\ \text{V}}{3000\ \Omega} = 0.004\ \text{A} = 4\ \text{mA}$$

These individual currents add up to the total input current:

$$I_{\text{in}} = I_1 + I_2 = 12\ \text{mA} + 4\ \text{mA} = 16\ \text{mA}$$

- This statement is referred to as Kirchhoff's current law

- With this law, and Ohm's law, you come up with the *current divider equations,* shown at the bottom of Fig. 2.41

- These equations come in handy when you know the input current but not the input voltage.

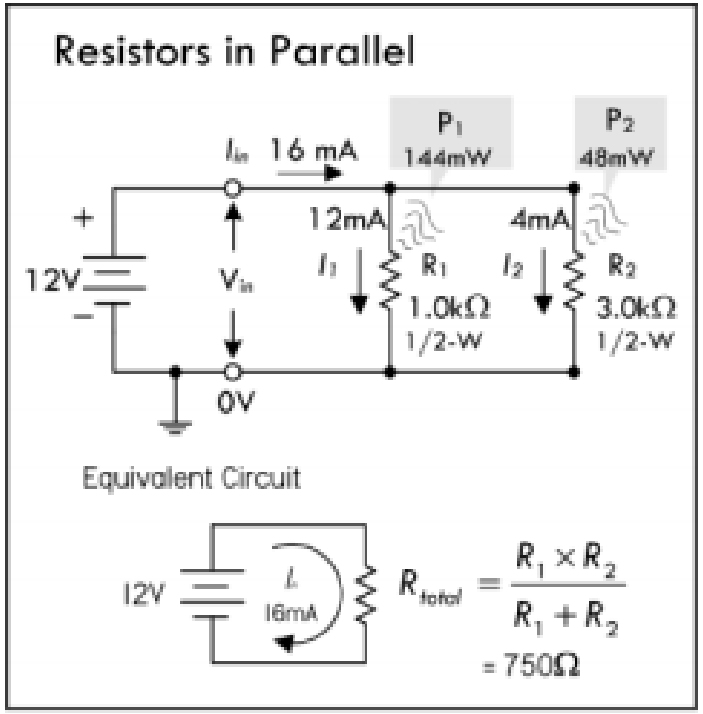
Resistors in Parallel
I_{in} 16 mA
P_1
144mW
P_2
48mW
+
12V
−
V_{in}
12mA
I_1
R_1
1.0kΩ
1/2-W
4mA
I_2
R_2
3.0kΩ
1/2-W
0V
Equivalent Circuit
12V
I
16mA
$R_{total} = \frac{R_1 \times R_2}{R_1 + R_2}$
= 750Ω

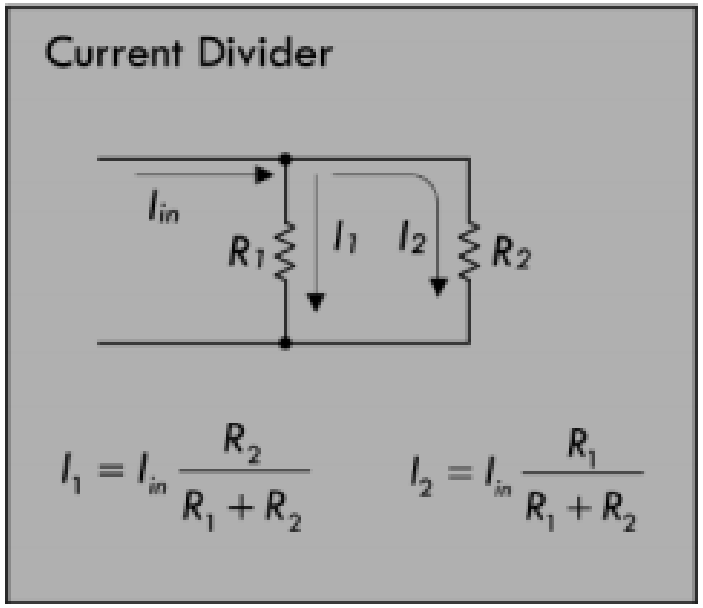
Current Divider
I_{in}
R_1
I_1
I_2
R_2
$I_1 = I_{in} \frac{R_2}{R_1 + R_2}$
$I_2 = I_{in} \frac{R_1}{R_1 + R_2}$

FIGURE 2.41

- We could have just as easily found the total current using:

$$I_{in} = V_{in}/R_{total} = (12\ \text{V})/(750\ \Omega) = 0.016\ \text{A} = 16\ \text{mA}$$

To find how much power resistors in parallel dissipate, apply the power law:

$$P_{tot} = I_{in}V_{in} = (0.0016\ \text{A})(12\ \text{V}) = 0.192\ \text{W} = 192\ \text{mW}$$

$$P_1 = I_1V_{in} = (0.012\ \text{A})(12\ \text{V}) = 0.144\ \text{W} = 144\ \text{mW}$$

$$P_2 = I_2V_{in} = (0.004\ \text{A})(12\ \text{V}) = 0.048\ \text{W} = 48\ \text{mW}$$

Example 2: Three resistors $R_1 = 1\ k\Omega$, $R_2 = 2\ k\Omega$, $R_3 = 4\ k\Omega$ are in parallel. Find the equivalent resistance. Also, if a 24-V battery is attached to the parallel circuit to complete a circuit, find the total current, individual currents through each of the resistors, total power loss, and individual resistor power losses.

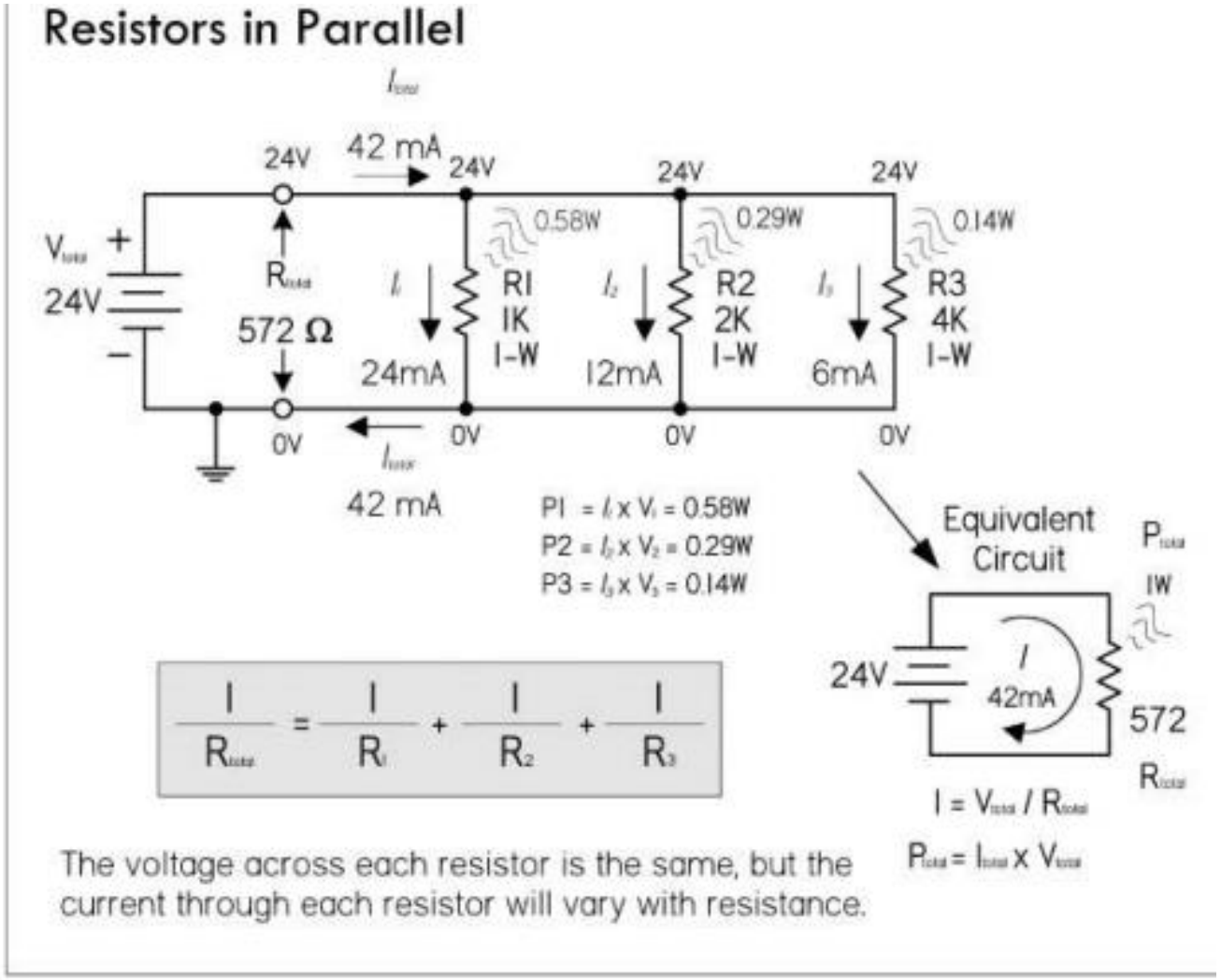

$$\frac{1}{R_{total}} = \frac{1}{R_1} + \frac{1}{R_2} + \frac{1}{R_3}$$

FIGURE 2.42

The total resistance for resistors in parallel:

$$\frac{1}{R_{\text{total}}} = \frac{1}{R_1} + \frac{1}{R_2} + \frac{1}{R_3}$$

$$= \frac{1}{1000\ \Omega} + \frac{1}{2000\ \Omega} + \frac{1}{4000\ \Omega} = 0.00175\ \Omega$$

$$R_{\text{total}} = \frac{1}{0.00175\ \Omega^{-1}} = 572\ \Omega$$

The current through each of the resistors:

$$I_1 = V_1/R_1 = 24\ \text{V}/1000\ \Omega = 0.024\ \text{A} = 24\ \text{mA}$$

$$I_2 = V_2/R_2 = 24\ \text{V}/2000\ \Omega = 0.012\ \text{A} = 12\ \text{mA}$$

$$I_3 = V_3/R_3 = 24\ \text{V}/4000\ \Omega = 0.006\ \text{A} = 6\ \text{mA}$$

The total current, according to Kirchhoff's current law:

$$I_{total} = I_1 + I_2 + I_3 = 24\ \text{mA} + 12\ \text{mA} + 6\ \text{mA} = 42\ \text{mA}$$

The total power dissipated by the parallel resistors:

$$P_{total} = I_{total} \times V_{total} = 0.042\ \text{A} \times 24\ \text{V} = 1.0\ \text{W}$$

The power dissipated by individual resistors is shown in Fig. 2.42.

Resistors in Series

- When a circuit has a number of resistors connected in series, the total resistance of the circuit is the sum of the individual resistances

- Also, the amount of current flowing through each resistor in series is the same, while the voltage across each resistor varies with resistance

- The formula for finding the total resistance of resistors in series is:

$$R_{\text{total}} = R_1 + R_2 + R_3 + R_4 + \cdots \tag{2.19}$$

- The dots indicate that as many resistors as necessary may be added

- You can derive this formula by noting that the sum of all the voltage drops across each series resistor will equal the applied voltage across the combination $V_{\text{total}} = V_1 + V_2 + V_3 + \ldots + V_N$

- This is referred to as Kirchhoff's voltage law

- Applying Ohm's law, and noting that the same current I flows through each resistor, we get: $IR_{\text{total}} = IR_1 + IR_2 + IR_3 + \ldots + IR_N$

- Canceling the I's you get: $R_{\text{total}} = R_1 + R_2 + R_3 + R_4 + \ldots$

Example 1: If a 1.0-kΩ resistor is placed in series with a 2.0-kΩ resistor, the total resistance becomes:

$$R_{tot} = R_1 + R_2 = 1000\ \Omega + 2000\ \Omega = 3000\ \Omega = 3\ \text{k}\Omega$$

When these series resistors are placed in series with a battery, as shown in Fig. 2.43, the total current flow I is simply equal to the applied voltage V_{in}, divided by the total resistance:

$$I = \frac{V_{in}}{R_{tot}} = \frac{9\ \text{V}}{3000\ \Omega} = 0.003\ \text{A} = 3\ \text{mA}$$

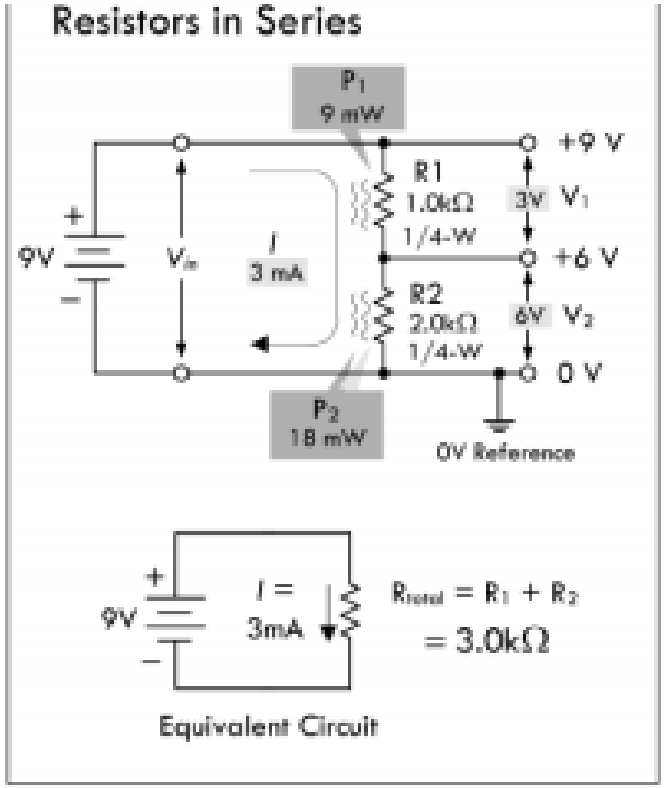
Resistors in Series
P1
9 mW
+9 V
R1
1.0kΩ
1/4-W
3V V1
+6 V
9V
Vin
I
3 mA
R2
2.0kΩ
1/4-W
6V V2
0 V
P2
18 mW
0V Reference
9V
I =
3mA
Rtotal = R1 + R2
= 3.0kΩ
Equivalent Circuit

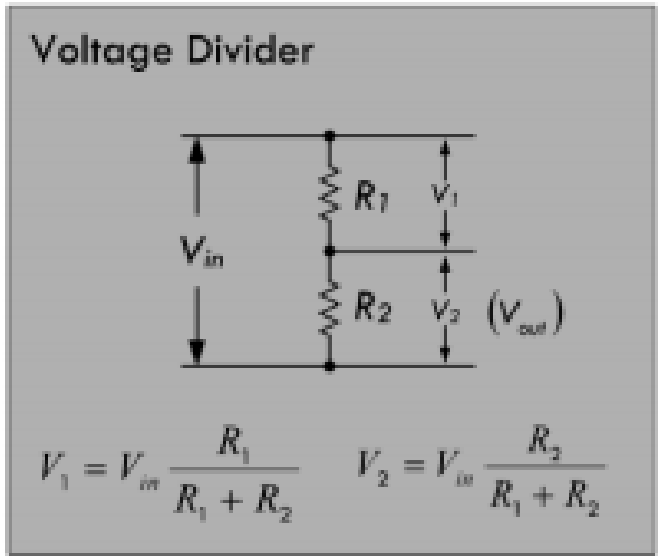
Voltage Divider
Vin
R1
V1
R2
V2
(Vout)
$V_1 = V_{in}\frac{R_1}{R_1 + R_2}$
$V_2 = V_{in}\frac{R_2}{R_1 + R_2}$

FIGURE 2.43

Since the circuit is a series circuit, the currents through each resistor are equal to the total current I:

$$I_1 = 3 \text{ mA}, I_2 = 3 \text{ mA}$$

To find the voltage drop across each resistor, apply Ohm's law:

$$V_1 = I_1 \times R_1 = 0.003 \text{ A} \times 1000\ \Omega = 3 \text{ V}$$

$$V_2 = I_2 \times R_2 = 0.003 \text{ A} \times 2000\ \Omega = 6 \text{ V}$$

Now, we didn't really have to calculate the current. We could have just plugged $I = V_{in}/R_{tot}$ into I_1 and I_2 in the preceding equations and got:

$$V_1 = IR_1 = \frac{V_{in}}{R_1 + R_2} \times R_1$$

$$V_2 = IR_2 = \frac{V_{in}}{R_1 + R_2} \times R_2$$

(Voltage divider equations)

- These equations are called *voltage divider equations* and are so useful in electronics that it is worth memorizing them. (See Fig. 2.43.)

- Often V_2 is called the output voltage V_{out}

- The voltage drop across each resistor is directly proportional to the resistance

- The voltage drop across the 2000-Ω resistor is twice as large as that of the 1000-Ω resistor

- Adding both voltage drops together gives you the applied voltage of 9 V:

$$V_{in} = V_1 + V_2 \qquad 9\text{ V} = 3\text{ V} + 6\text{ V}$$

The total power loss and individual resistor power losses are:

$$P_{tot} = IV_{in} = (0.003\text{ A})(9\text{ V}) = 0.027\text{ W} = 27\text{ mW}$$

$$(P_{tot} = I^2R_{tot} = (0.003\text{ A})^2(3000\ \Omega) = 0.027\text{ W} = 27\text{ mW})$$

$$P_1 = I^2R_1 = (0.003\text{ A})^2(1000\ \Omega) = 0.009\text{ W} = 9\text{ mW}$$

$$P_2 = I^2R_2 = (0.003\text{ A})^2(2000\ \Omega) = 0.018\text{ W} = 18\text{ mW}$$

The larger resistor dissipates twice as much power.

Example 2: The input of an IC requires a constant 5 V, but the supply voltage is 9 V. Use the voltage divider equations to create a voltage divider with an output of 5 V. Assume the IC has such a high input resistance (10 MΩ) that it practically draws no current from the divider.

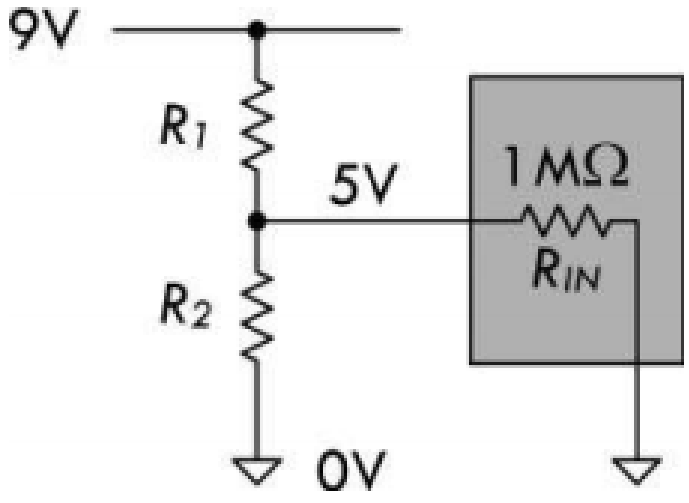

FIGURE 2.44

Answer: Since we assume the IC draws no current, we can apply the voltage divider directly:

$$V_{out} = V_{in} \frac{R_2}{R_1 + R_2}$$

We must choose voltage divider resistors, making sure our choice doesn't draw too much current, causing unnecessary power loss. To keep things simple for now, let's choose R_2 to be 10 kΩ. Rearranging the voltage divider and solving for R_1:

$$R_1 = R_2 \frac{(V_{in} - V_{out})}{V_{out}} = (10{,}000\ \Omega)\frac{(9-5)}{5} = 8000\ \Omega = 8\ \text{k}\Omega$$

Example 3: You have a 10-V supply, but a device that is to be connected to the supply is rated at 3 V and draws 9.1 mA. Create a voltage divider for the load device.

Answer: In this case, the load draws current and can be considered a resistor in parallel with R_2. Therefore, using the voltage divider relation without taking the load into consideration will not work. We must apply what is called the 10 percent rule.

- **The 10 Percent Rule:** This rule is a standard method for selecting R_1 and R_2 that takes into account the load and minimizes unnecessary power losses in the divider.

- The first thing you do is select R_2 so that I_2 is 10 percent of the desired load current

- This resistance and current are called the *bleeder resistance* and *bleeder current*

- The bleeder current in our example is:

$$I_{\text{bleed}} = I_2 = (0.10)(9.1\ \text{mA}) = 0.91\ \text{mA}$$

Using Ohm's law, next we calculate the bleeder resistance:

$$R_{\text{bleed}} = R_2 = 3\ \text{V}/0.00091\ \text{A} = 3297\ \Omega$$

Considering resistor tolerances and standard resistance values, we select a resistor in close vicinity—3300 Ω.

Next, we need to select R_1, so that the output is maintained at 3 V.

To do this, simply calculate the total current through the resistor and use Ohm's law:

$$I_1 = I_2 + I_{\text{load}} = 0.91\ \text{mA} + 9.1\ \text{mA} = 10.0\ \text{mA} = 0.01\ \text{A}$$

$$R_1 \frac{10\ \text{V} - 3\ \text{V}}{0.01\ \text{A}} = 700\ \Omega$$

In terms of power ratings:

$$P_{R1} = V_1^2/R_1 = (7\ \text{V})^2/(700\ \Omega) = 0.07\ \text{W} = 70\ \text{mW}$$

$$P_{R2} = V_2^2/R_2 = (3\ \text{V})^2/(3300\ \Omega) = 0.003\ \text{W} = 3\ \text{mW}$$

Low-power ¼-W resistors will suffice.

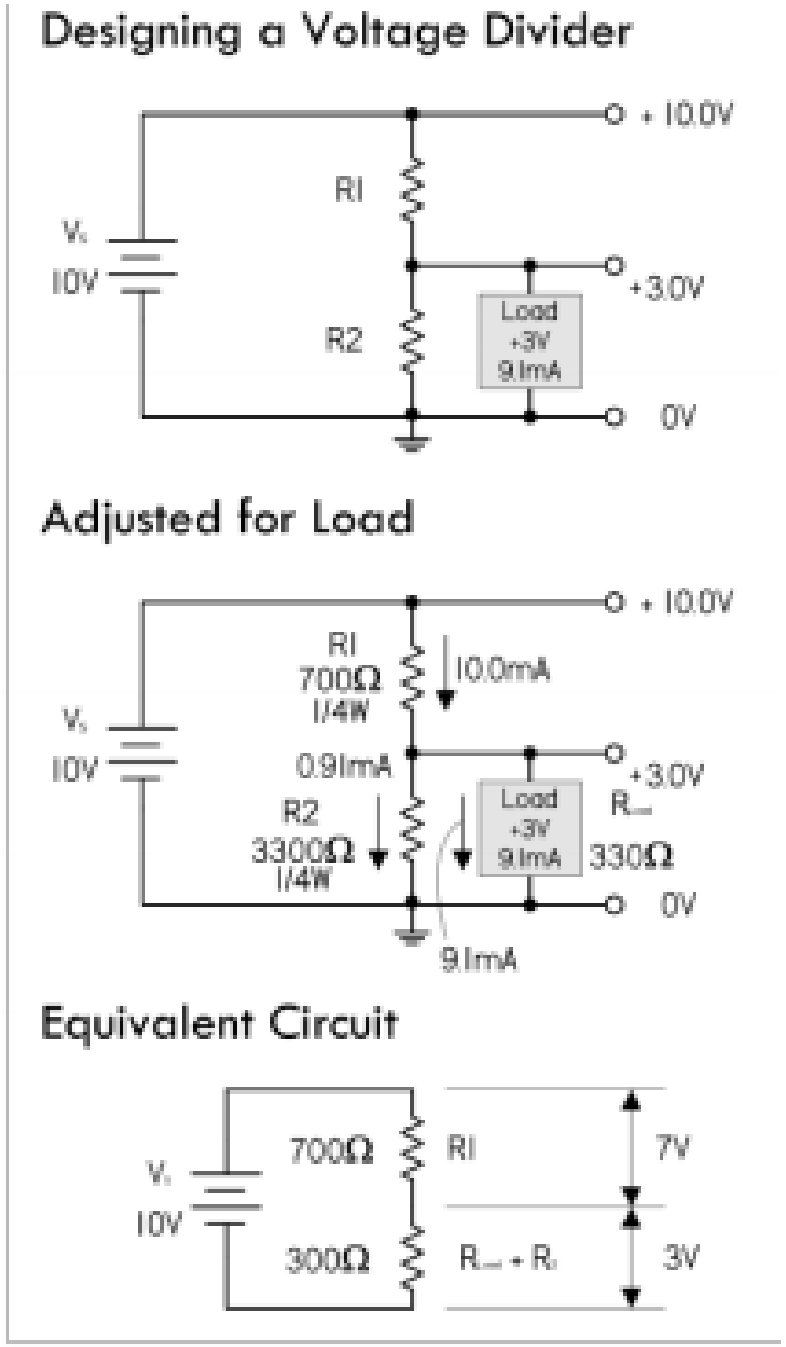
Designing a Voltage Divider
+10.0V
R1
Vs
10V
+3.0V
Load
+3V
9.1mA
R2
0V
Adjusted for Load
+10.0V
R1
700Ω
1/4W
10.0mA
Vs
10V
0.9mA
+3.0V
R2
3300Ω
1/4W
Load
+3V
9.1mA
330Ω
0V
9.1mA
Equivalent Circuit
700Ω
R1
7V
Vs
10V
300Ω
3V

FIGURE 2.45

- In actual practice, the computed value of the bleeder resistor does not always come out to an even value

- Since the rule of thumb for bleeder current is only an estimated value, the bleeder resistor can be of a value close to the computed value. (If the computed value of the resistance were 500Ω, a 5 percent 510Ω resistor could be used.

- Once the actual value of the bleeder resistor is selected, the bleeder current must be recomputed

- The voltage developed by the bleeder resistor must be equal to the voltage requirement of the load in parallel with the bleeder resistor

Example: Find the equivalent resistance of series resistors R_1 = 3.3k, R_2 = 4.7k, R_3 = 10k. If a 24-V battery is attached to the series resistors to complete a circuit, find the total current flow, the individual voltage drops across the resistors, the total power loss, and the individual power loss of each resistor.

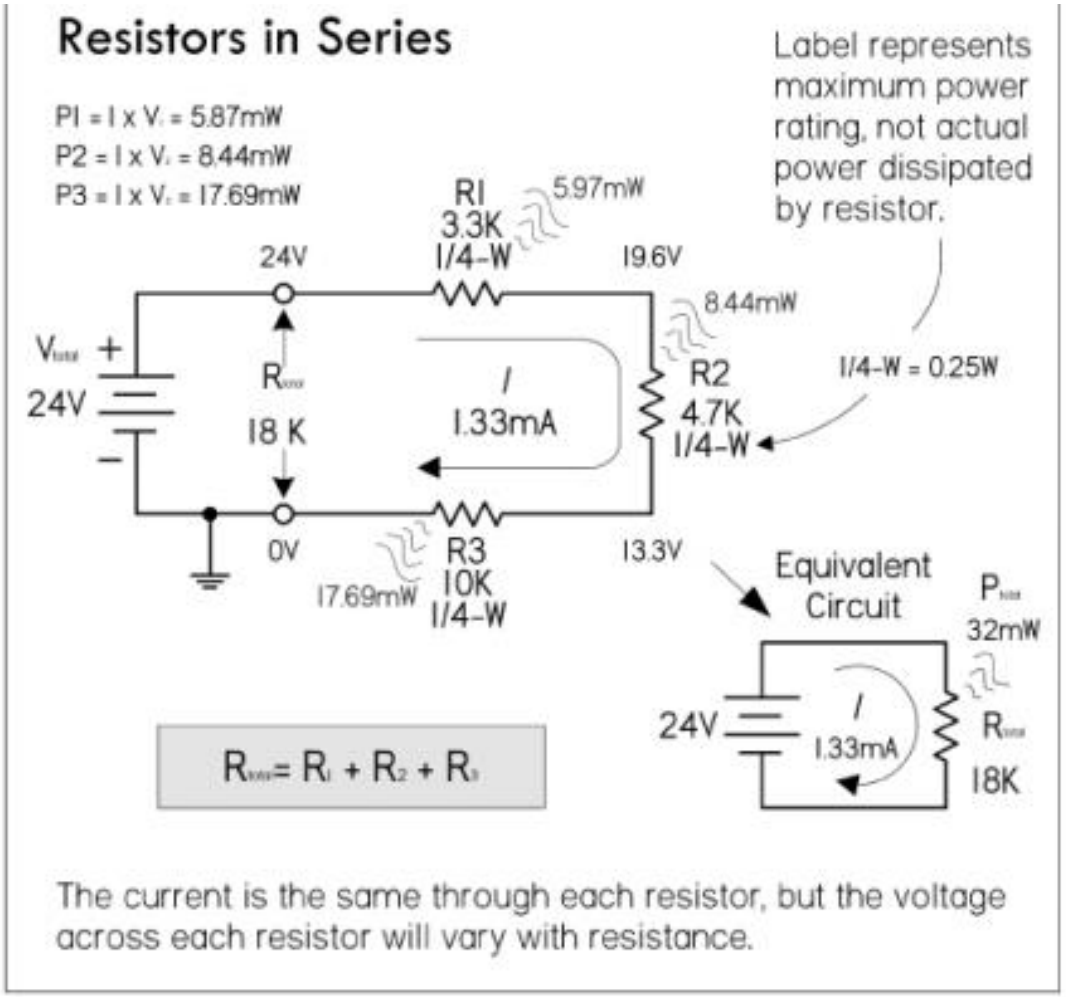

FIGURE 2.46

The equivalent resistance of the three resistors:

$$R_{total} = R_1 + R_2 + R_3$$

$$R_{total} = 3.3\ k\Omega + 4.7\ k\Omega + 10\ k\Omega = 18\ k\Omega$$

The total current flow through the resistors is:

$$I_{total} = \frac{V_{total}}{R_{total}} = \frac{24\ V}{18{,}000\ \Omega}$$

$$= 0.00133\ A = 1.33\ mA$$

Using Ohm's law, the voltage drops across the resistors are:

$$V_1 = I_{total} \times R_1 = 1.33\ mA \times 3.3\ k\Omega = 4.39\ V$$

$$V_2 = I_{total} \times R_2 = 1.33\ mA \times 4.7\ k\Omega = 6.25\ V$$

$$V_3 = I_{total} \times R_3 = 1.33\ mA \times 10\ k\Omega = 13.30\ V$$

The total power dissipated is:

$$P_{\text{total}} = I_{\text{total}} \times V_{\text{total}} = 1.33 \text{ mA} \times 24 \text{ V} = 32 \text{ mW}$$

Power dissipated by individual resistors is shown in Fig. 2.46.

Measuring Voltage, Current, and Resistance

- Voltmeters, ammeters, and ohmmeters, used to measure voltage, current, and resistance, ideally should never introduce any effects within the circuit under test

- In theory, an ideal voltmeter should draw no current as it measures a voltage between two points in a circuit; it has infinite input resistance R_{in}

- Likewise, an ideal ammeter should introduce no voltage drop when it is placed in series within the circuit; it has zero input resistance

- An ideal ohmmeter should provide no additional resistance when making a resistance measurement

- Real meters, on the other hand, have limitations that prevent them from making truly accurate measurements

- This stems from the fact that the circuit of a meter requires a sample current from the circuit under test in order to make a display measurement

- Figure 2.55 shows symbols for an ideal voltmeter, ammeter, and ohmmeter, along with the more accurate real- life equivalent circuits.

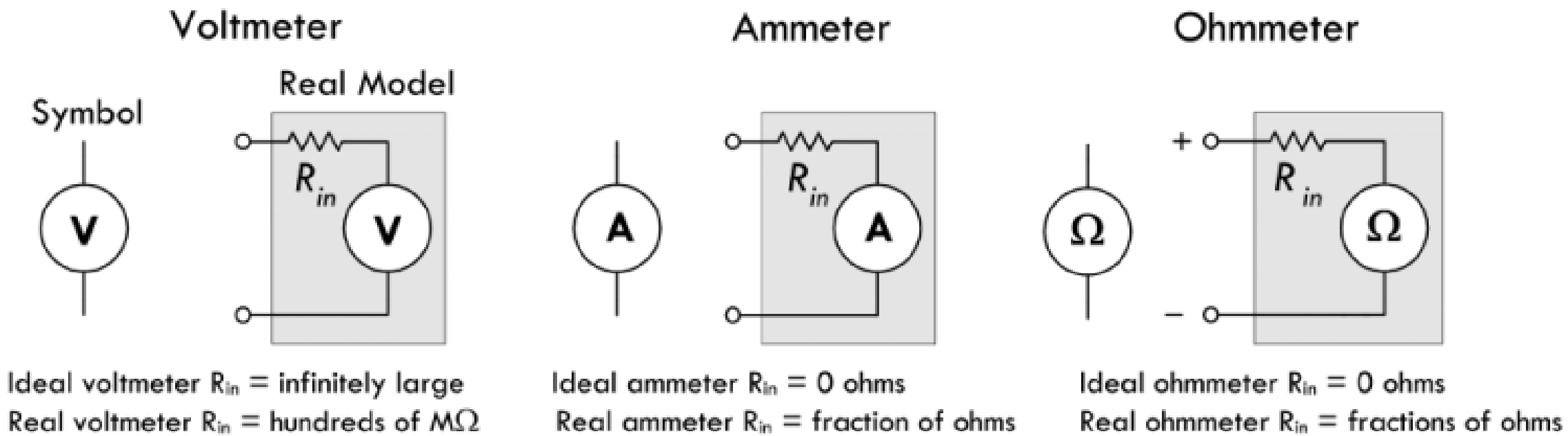
Voltmeter
Symbol
Real Model
V
R_{in}
V
Ammeter
A
R_{in}
A
Ohmmeter
Ω
+
R_{in}
Ω
−
Ideal voltmeter R_{in} = infinitely large
Real voltmeter R_{in} = hundreds of MΩ
Ideal ammeter R_{in} = 0 ohms
Real ammeter R_{in} = fraction of ohms
Ideal ohmmeter R_{in} = 0 ohms
Real ohmmeter R_{in} = fractions of ohms

FIGURE 2.55

- An *ideal voltmeter* has infinite input resistance and draws no current; a real voltmeter's input resistance is several hundred MΩs

- An *ideal ammeter* has zero input resistance and provides no voltage drop; a real ammeter's input resistance is fractions of ohms

- An *ideal ohmmeter* has zero internal resistance; a real ohmmeter's internal resistance is fractions of ohms

- It is important to read your instrument manuals to determine the internal resistances.

- The effects of meter internal resistance are shown in Fig. 2.56.
- In each case, the internal resistance becomes part of the circuit.
- The percentages of error in measurements due to the internal resistances become more pronounced when the circuit resistances approach the meters’ internal resistance.

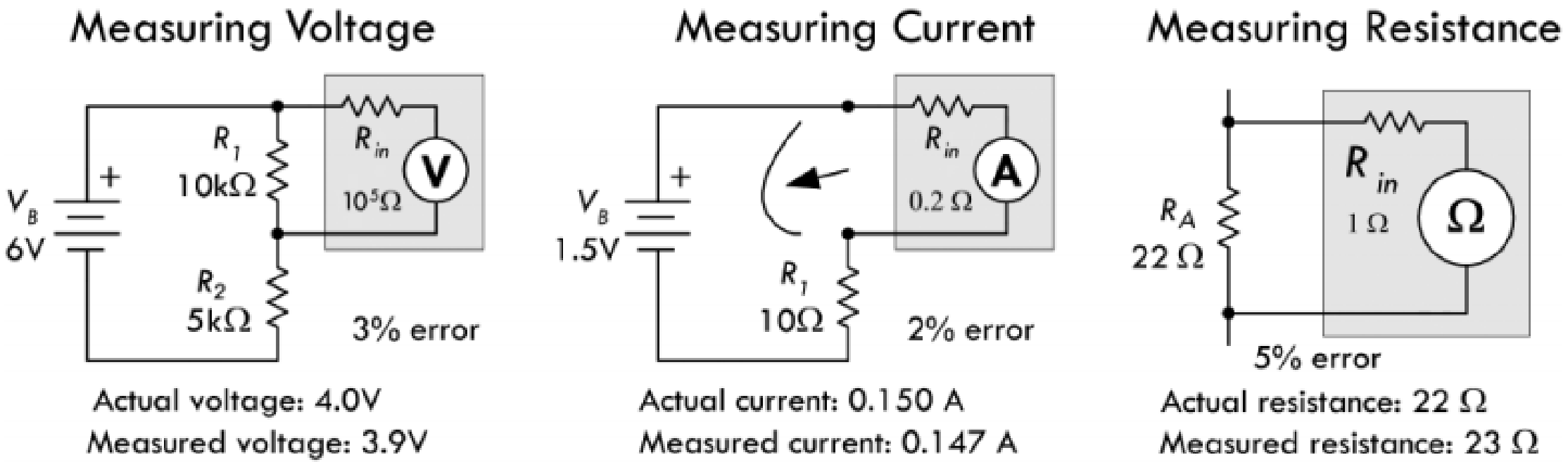
Measuring Voltage
V_B
6V
+
R_1
10kΩ
R_2
5kΩ
R_{in}
10^5Ω
V
3% error
Actual voltage: 4.0V
Measured voltage: 3.9V
Measuring Current
V_B
1.5V
+
R_1
10Ω
R_{in}
0.2 Ω
A
2% error
Actual current: 0.150 A
Measured current: 0.147 A
Measuring Resistance
R_A
22 Ω
R_{in}
1 Ω
Ω
5% error
Actual resistance: 22 Ω
Measured resistance: 23 Ω

FIGURE 2.56

- Figure 2.57 shows the actual makeup of a basic analog multimeter

- Note that this device is overly simplistic; real meters are much more sophisticated, with provisions for range selection, ac measurements, and so on

- At any rate, it shows you that the meters are nonideal due to the sample current required to drive the galvanometer’s needle

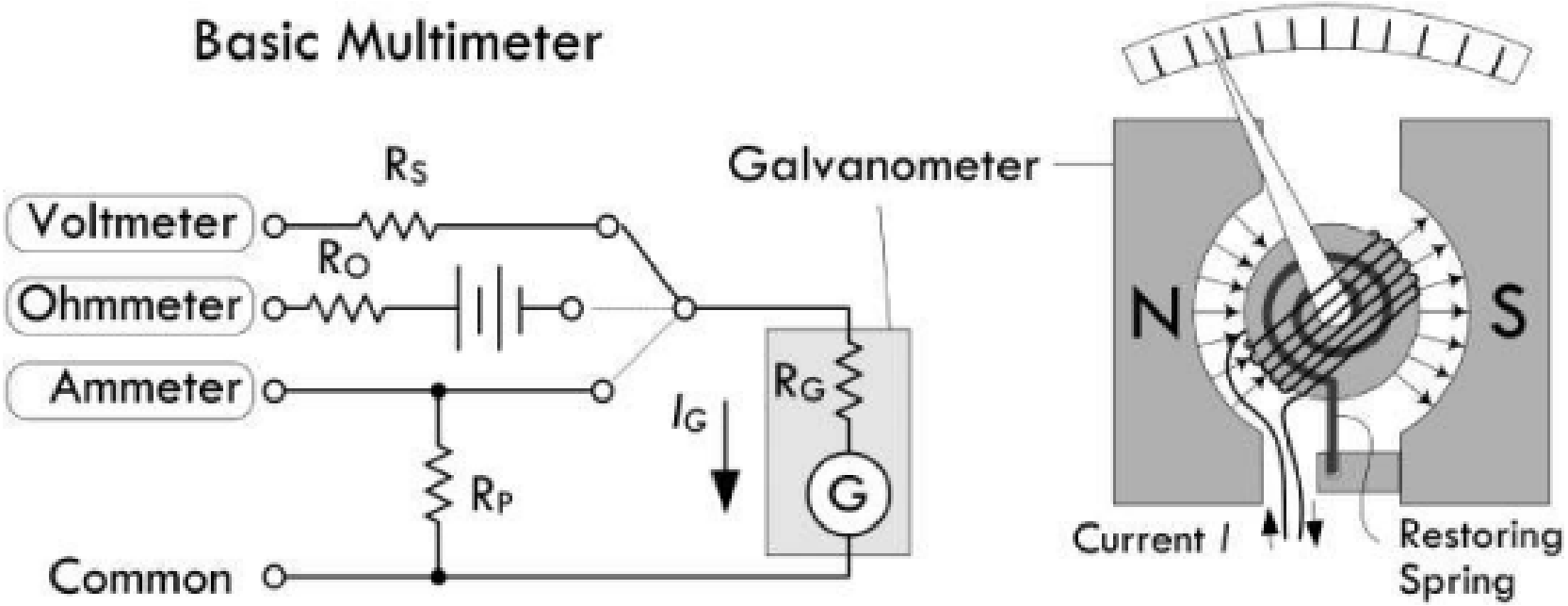

FIGURE 2.57 The heart of this simple analog multimeter is a galvanometer which measures current flow I_G. Current sent through the galvanometer's wire leads will generate a magnetic field from the coil windings in the center rotor. Since the coil is tilted relative to the N-S alignment of the permanent magnet, the rotor will rotate in accordance with the amount of current flow. Normally you get full deflection of the needle at extremely low current levels, so you can add a parallel resistor to divert current flow away from the galvanometer. The galvanometer can also be used as a voltmeter by placing its lead at the point voltages within the circuit. If there is a voltage difference at the leads, a current will flow into the galvanometer and move the needle in proportion to the voltage magnitude. A series resistor is used to limit current flow and needle deflection. A galvanometer can be used to make an ohmmeter, too, provided you place a battery in series with it. Again, to calibrate needle deflection, a series resistor R_O is used.